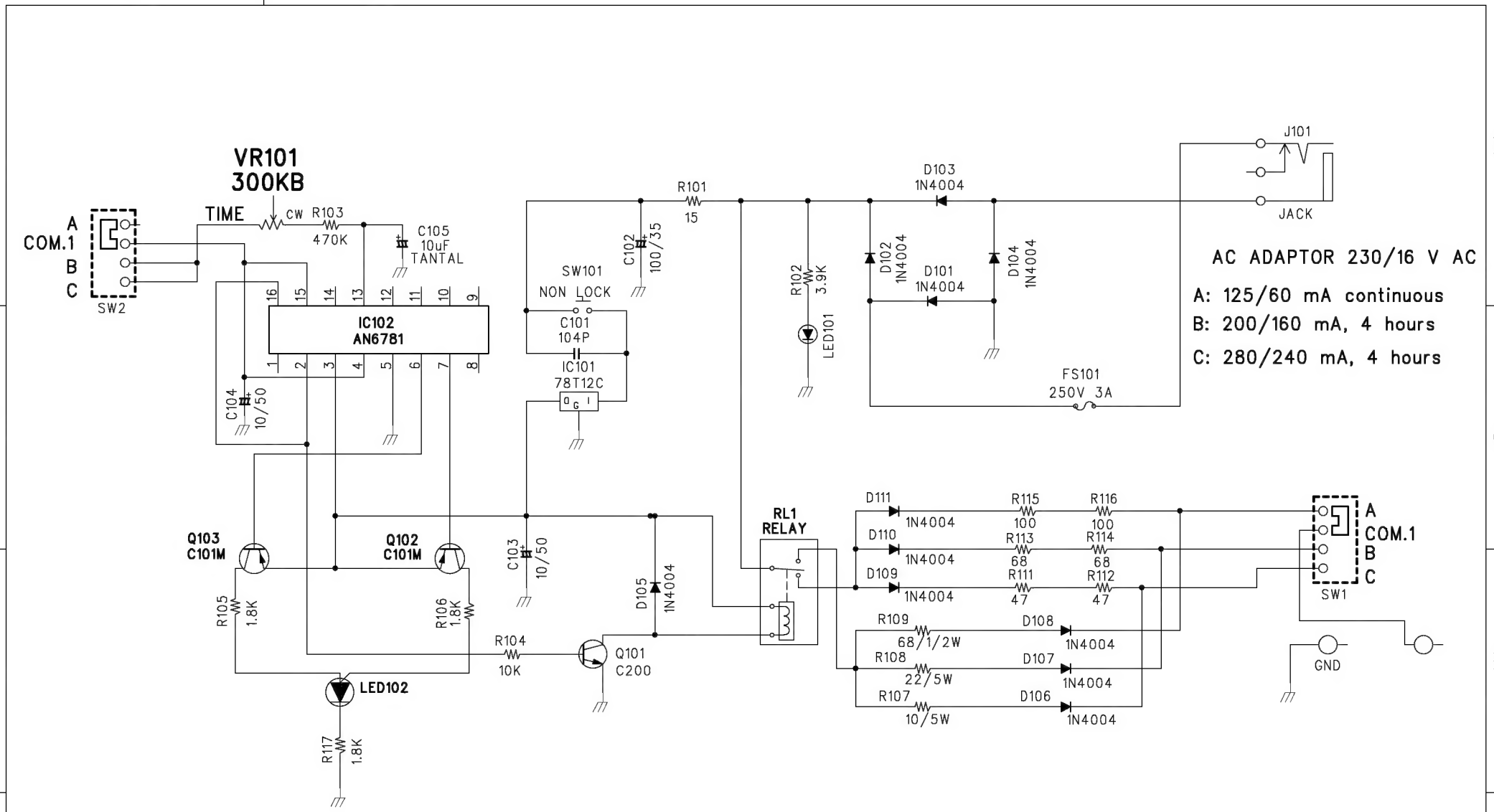

SEUNG YONG ELECTRONICS CO.,LTD				
REV.	DATE	NAME	DESCRIPTION	CHECK
			DESK CHARGER AE 29XX / AE 501	
UNIT	SCALS :	SHEET OF	ALBRECHT ELECTRONIC GMBH	
DRW.	CHK.	APP.	MODEL DG-630	
06/96 W.SCH			DRAWING NO.: DC630-0.SCH	